LaLuce

ORDERING CODE

LL | PDLS/SQ2 | W | CCT | IP | WH

- WH — Finish
- IP — IP Rating
- CCT — Color Temperature
- W — Luminaire Power
- PDLS/SQ2 — Luminaire Family Name
- LL — Manufacturer

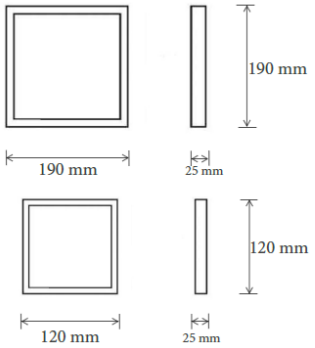

Specification

Fixture Material	:	Die Cast Aluminium
Fixture Finish	:	Thermoset powder coated in White & Black
Diffuser	:	Opal Polycarbonate
LED Chip	:	CREE
Binning	:	3 step MacAdam
Lifespan	:	50,000Hrs
CRI	:	>90
Input Voltage	:	220-240V AC, 50/60Hz
Operating Temperature	:	-25°C to 45°C
Warranty	:	5 Years against manufacturing defects

CE IP54 TÜV CREE DIMMABLE

Power (W)	Lumen Lm	IP Rating	Beam Angle	Available CCT
6 W	600Lm	IP54	Diffused	2700K 3000K 4000K 5000K 6000K
10 W	1000Lm			
12 W	1200Lm			
18 W	1800Lm			
20 W	2000Lm			
25 W	2500Lm			
30 W	3000Lm			

BEAM CUSTOM | FINISH RAL CUSTOM | COLOR CUSTOM